Check Valve (double disk) wafer type

Terugslagklep (dubbele schijf) wafertype

2401

Features

1. Wafer check valve (doubledisk).
2. Made of Cast Iron EN-GJL-250 (GG-25).
3. Disk made of Stainless Steel 1.4408 (CF8M).
4. Axle and spring made of AISI 316.
5. Seat of NBR vulcanised in groove.
6. Assembly between flanges EN1092 PN10/16 and ANSI150.
7. Installed in vertical, horizontal or inclined position.
8. Handling eyebolt included from size 10".
9. Face to Face according to EN 558-1.
10. Max. working pressure 16 bar.
11. Working temperature -10 ºC +100 ºC.



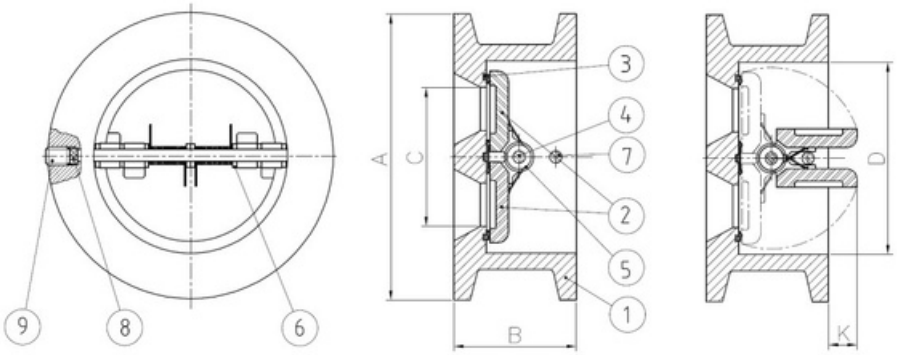

Nº	Name	Material	Surface Treatment	Spare Part Code
1	**Body**	Hierro Fundido / ***Cast iron*** EN-GJL-250	**Epoxy Painted**	------
2	**Disk**	Acero Inox / ***SS*** 1.4408	**Shot blasting**	------
3	**Seat**	NBR	------	------
4	**Axle**	Acero Inox / ***SS*** AISI 316	------	------
5	**Spring**	Acero Inox / ***SS*** AISI 316	------	K2401
6	**Washer**	PTFE	------	K2401
7	**Disk Stopper**	Acero Inox / ***SS*** AISI 316	------	------
8	**Plug**	NBR	------	K2401
9	**GrubScrew**	Acero Inox / ***SS*** AISI 304	------	K2401

Check Valve (double disk) wafer type

General dimensions

Ref	Size	DN	PN	Dimensions (mm) A	B	C	D	K	Weight (kg)
2401 09	2“	50	16	101	54	48	66	5	1.500
2401 10	2 1/2“	65	16	119	54	59	80	11	2.050
2401 11	3“	80	16	133	57	72	95	11	2.700
2401 12	4 “	100	16	164	64	90	117	24	4.100
2401 13	5“	125	16	194	70	110	145	34	6.450
2401 14	6“	150	16	220	76	135	170	43	7.900
2401 16	8“	200	16	275	95	175	224	67	15.800
2401 18	10“	250	16	328	108	224	265	80	23.000
2401 20	12“	300	16	378	143	262	312	96	40.500

Seat Detail

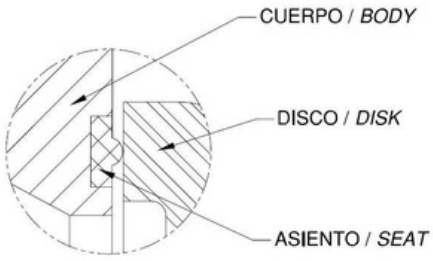

MINIMUN OPENING PRESSURE

Minimum pressure needed to start opening the valve. Measured with springs and fluid upwards (air).

Size	MOP(mbar)
2”	40
2 1/2”	40
3”	45
4”	50
5”	55
6”	60
8”	65
10”	70
12”	75

Kv VALUES

Kv= The rate of flow of water in cubic meter per hour that will generate a pressure drop of 1 bar across the valve.

D	Inch	2”	21/2”	3”	4”	5”	6”	8”	10”	12”
Kv	m/h^3	68	111	206	266	455	813	1132	1950	2300

Head losses diagram

(H۲O – ۲۰ °C Horizontal flow)

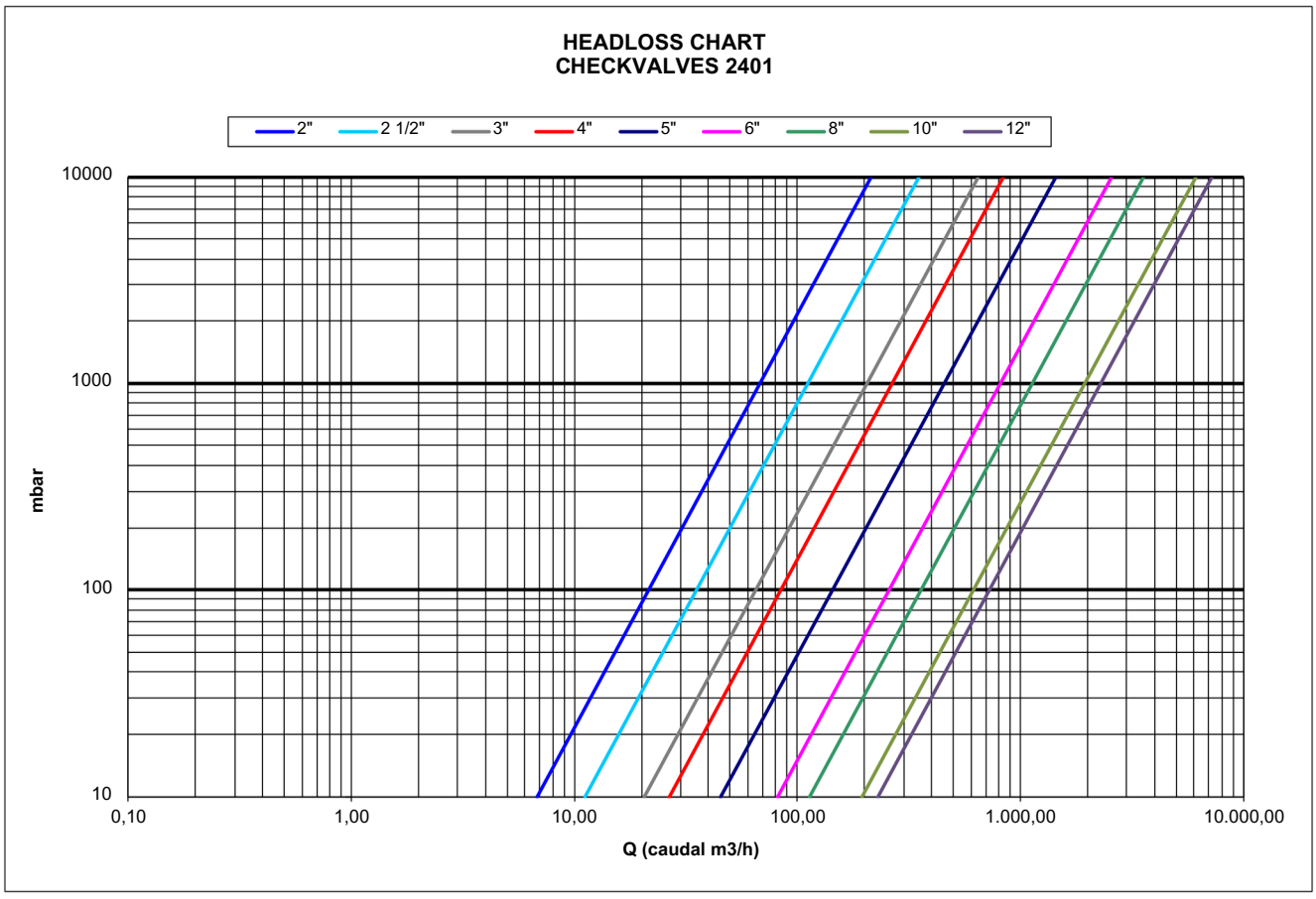

Pressure temperature rating

